SPECIFICATION
FOR
OLED+HDMI Module

MODULE No:	ID-050HDOIN116-C000-SP005A-HDMI
CUSTOMER:	

I-DISPLAY	INITIAL	DATE
PREPARED BY		
CHECKED BY		
APPROVED BY		

CUSTOMER	INITIAL	DATE
APPROVED BY		

Revision History

Date	Rev. No.	Page	Summary
2024.07.26	V1.0	ALL	FIRST ISSUE
2024.10.25	V1.1	6	SECOND ISSUE
2024.11.19	V1.2	6	THIRD ISSUE
2025.07.25	V1.3	6	FOURTH ISSUE

Contents

1. Basic Specifications 4
   1.1 TFT Features 4
   1.2 Module Features 4
   1.3 Mechanical Information 5
2. Block Diagram 5
3. Outline dimension 6
4. Pin Assignment 7
   4.1 Power Input 7
   4.2 Touch Input(Dummy) 7
   4.3 HDMI Input 8
5. AMOLED Optical Characteristics 9
   5.1 Optical specification 9
6. Electrical Characteristics 16
   6.1 Absolute Maximum Rating 16
   6.2 DC Electrical Characteristics 16
7. AMOLED Module Out-Going Quality Level 17
   7.1 VISUAL & FUNCTION INSPECTION STANDARD 17
      7.1.1 Inspection conditions 17
      7.1.2 Definition 17
      7.1.3 Sampling Plan 18
      7.1.4 Criteria (Visual) 19
8. Reliability Test Result 23
9. Cautions and Handling Precautions 24
   9.1 Handling and Operating the Module 24
   9.2 Storage and Transportation. 24
10. Packing 25

1. Basic Specifications

* Description

4.97” HD720 is a color active matrix AMOLED module using Low Temperature Poly-silicon Thin Film Transistors as active switching devices. This module is composed of AMOLED,HDMI adapter board. The resolution of a 4.97” AMOLED contains 720x1280 pixels, and can display up to 16.7M colors.

* Operating Instructions

This product supports the following operating systems:Windows 7/8/10,Android, Linux, Raspberry Pi.

1.Connect the DC-044 DC power.

2.Connect the HDMI cable to Windows 7/8/10 or Android or Linux or Raspberry Pi.k

3.Connect the micro USB for touch panel, if this module supports it.

1.1 TFT Features

General Information Items	Specification	Unit	Note
	Main Panel		
Display area(AA)	61.884(H)*110.016(V) (4.97inch)	mm	
Display colors	16.7M	colors	
Number of pixels	720(RGB)*1280	dots	
Pixel arrangement	Rendering	-	
Pixel pitch	28.65*85.95	μm	
Viewing angle	ALL	o'clock	
Glass thickness (LTPS/encapsulation glass)	0.20 / 0.30	mm	
Operating temperature	-20～+70	℃	
Storage temperature	-30～+80	℃	

1.2 Module Features

General Information Items	Specification	Unit	Note
Display Interface	HDMI(Type A)	-	
Touch Interface	Micro USB	-	
Touch screen	On-Cell	-	
Power supply	DC-12V(DC-044)	-	

1.3 Mechanical Information

Item		Min.	Typ.	Max.	Unit	Note
Module size	Horizontal(H)	-	64.12	-	mm	
	Vertical(V)	-	116.72	-	mm	
	Depth(D)	-	0.94	--	mm	
Weight		-	34	-	g	

2. Block Diagram

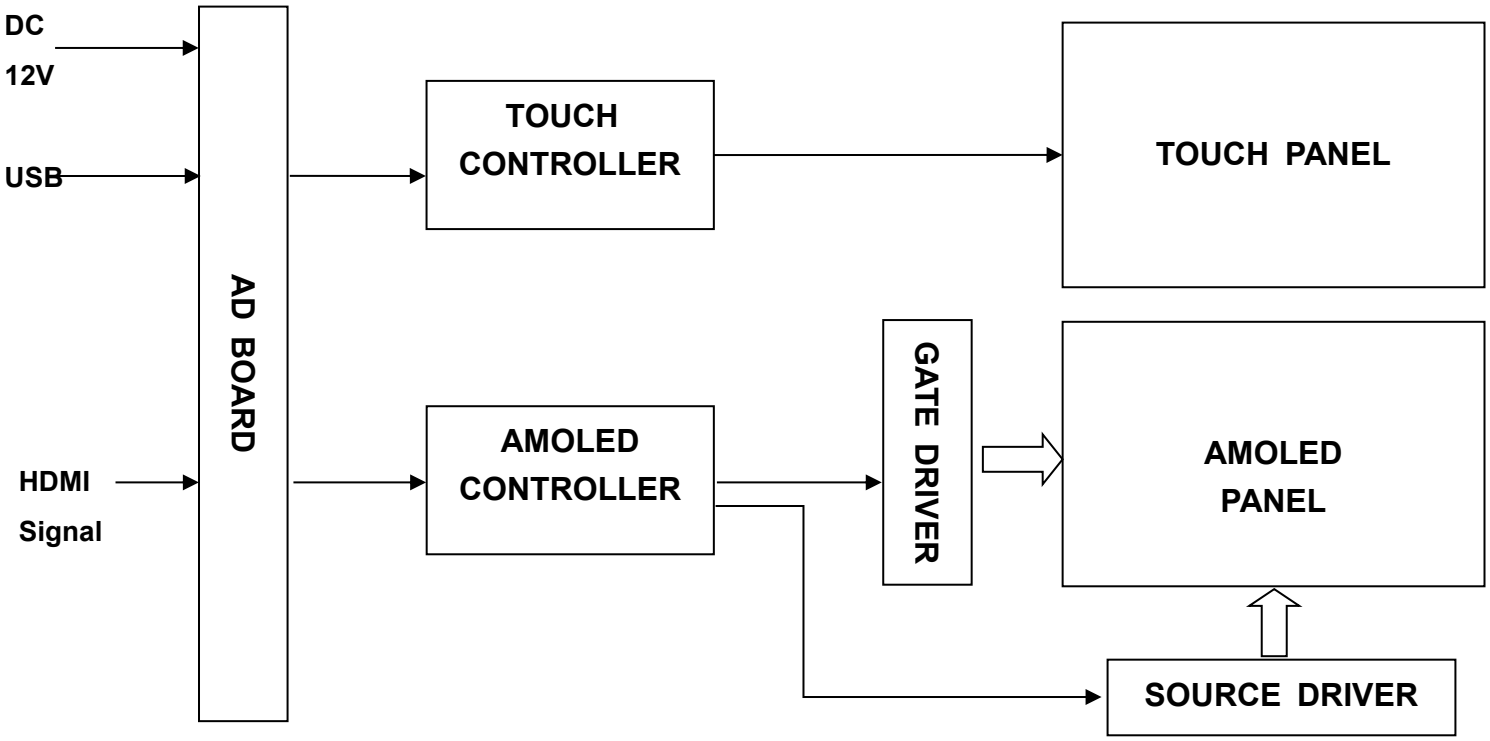

3. Outline dimension

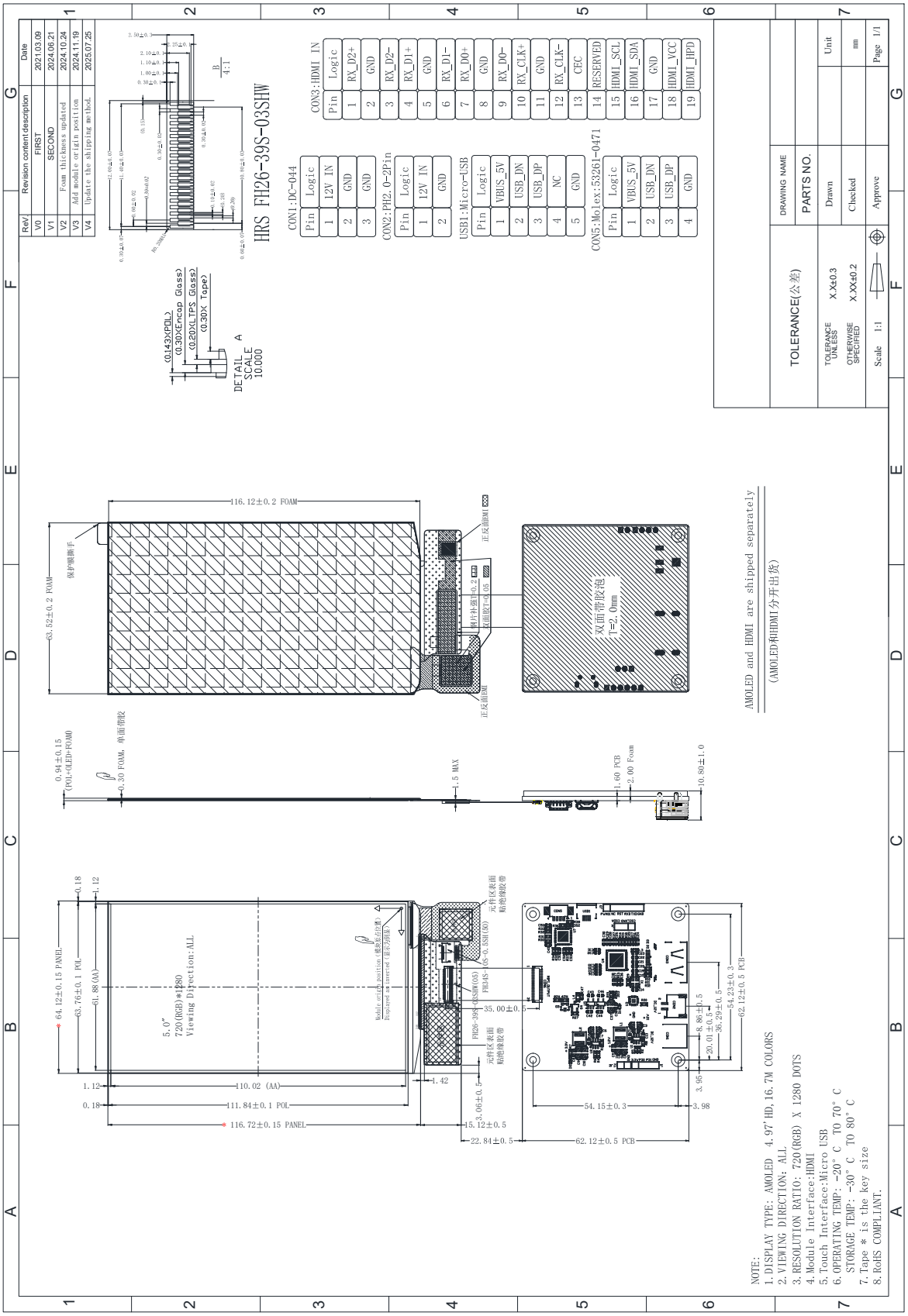

4. Pin Assignment

4.1 Power Input

CON1(DC-044 Socket)

NO.	SYMBOL	DISCRIPTION	I/O
1	DC_IN(12V)	Power supply (DC 12V).	P
2	GND	Ground	P
3	GND	Ground	P

Extension CON2(JST:S2B-PH-SM4-TB)

NO.	SYMBOL	DISCRIPTION	I/O
1	12V IN	Power supply (DC 12V).	P
2	GND	Ground	P

4.2 Touch Input(Dummy)

USB1(Micro USB)

NO.	SYMBOL	DISCRIPTION	I/O
1	VBUS_5V	Supply voltage(5V).	P
2	USB_DN	USB- signal.	I/O
3	USB_DP	USB+ signal.	I/O
4	NC	No connection.	
5	GND	Ground.	P

Extension CON5(Molex:53261-0471)

NO.	SYMBOL	DISCRIPTION	I/O
1	VBUS_5V	Supply voltage(5V).	P
2	USB_DN	USB- signal.	I/O
3	USB_DP	USB+ signal.	I/O
4	GND	Ground.	P

4.3 HDMI Input

The type of HDMI connector is a type A.

NO.	SYMBOL	DISCRIPTION	I/O
1	RX_D2+	HDMI Receiver channel 2 positive analog input.	I/0
2	GND	Ground.	P
3	RX_D2-	HDMI Receiver channel 2 negative analog input.	I/0
4	RX_D1+	HDMI Receiver channel 1 positive analog input.	I/0
5	GND	Ground.	P
6	RX_D1-	HDMI Receiver channel 1 negative analog inpsut.	I/0
7	RX_D0+	HDMI Receiver channel 0 positive analog input.	I/0
8	GND	Ground.	P
9	RX_D0-	HDMI Receiver channel 0 negative analog input.	I/0
10	RX_CLK+	HDMI Receiver clock positive analog input.	I
11	GND	Ground.	P
12	RX_CLK-	HDMI Receiver clock negative analog input.	I
13	CEC/DET_HDMI	No connection.	
14	NC	No connection.	
15	HDMI_SCL	HDMI Receiver DDC data channel.	I
16	HDMI_SDA	HDMI Receiver DDC clock channel.	I/0
17	GND	Ground.	P
18	HDMI_5V	HDMI Supply voltage (5.0V).	P
19	HPD	HDMI Receiver hot plug detect output	O

5. AMOLED Optical Characteristics

5.1 Optical specification

Item		Symbol	Condition	Min.	Typ.	Max.	Unit.	Note
Contrast Ratio		CR	Θ=0 Normal viewing angle	60000	--	--		Note3
Response time	Rising	$T_{R+}T_F$		--	-	2	msec	
	Falling			--				Note6
Color Gamut		S(%)		90	105	--	%	
Brightness Uniformity		L255		75			%	Note2
Brightness		L255			300		cd/m2	Note1
Color Filter Chromacicity	White	W_X		-0.02	0.29	+0.02		
		W_Y			0.31			
	Red	R_X		-0.03	0.67	+0.04		
		R_Y			0.33			
	Green	G_X			0.20			
		G_Y			0.72			
	Blue	B_X			0.13			
		B_Y			0.06			
Viewing angle			U/D/L/R CR≥1000	80	--	--	°	
Color shift (JNCD)			@ 45 degree			6		Note4
Cross-talk						2	%	Note5
Gamma			V(Gray)= 48,72,104,132,164, 192,224,255	2.0	2.2	2.4		
Color Temperature				6537	7437	8337	K	
Flicker			Normal Θ=Φ=0°			-40	dB	Note 7
Image Retention						3	min	Note 8
Image Sticking						3	hrs	Note 9
Color Uniformity			Full White Δu'v'			0.012		Note10
Lifetime			Ta=25℃	30000			hrs	

Note1: Temp.25℃， (Angle 、distance)

Environmental conditions：Temp.25℃±3℃， 65±20%RH，Dark Room 。

Distance of OLED display center to measuring machine is 50cm。

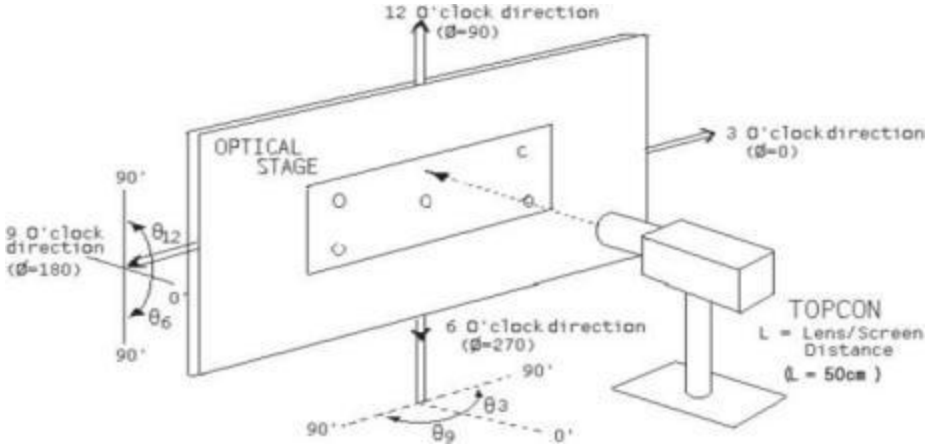

Note2: Brightness Uniformity definition

Measure 9 points of Display Brightness,

$$\text{Luminance uniformity} = \frac{\text{(Min Luminance of 9 points)}}{\text{(Max Luminance of 9 points)}} \times 100\%$$

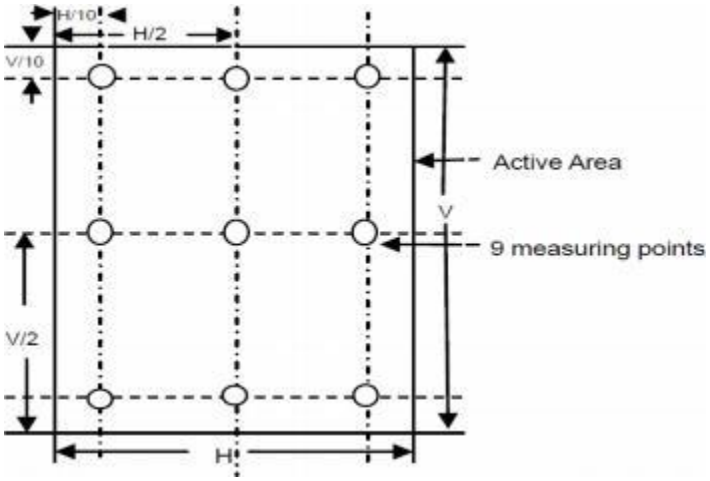

Note3: Contrast Ratio

Dark Room C.R=LW/LB

LW: full white brightness of display center P0;

LB : full black brightness of display center P0.

Contrast Ratio Uniformity = CRmin / CRmax

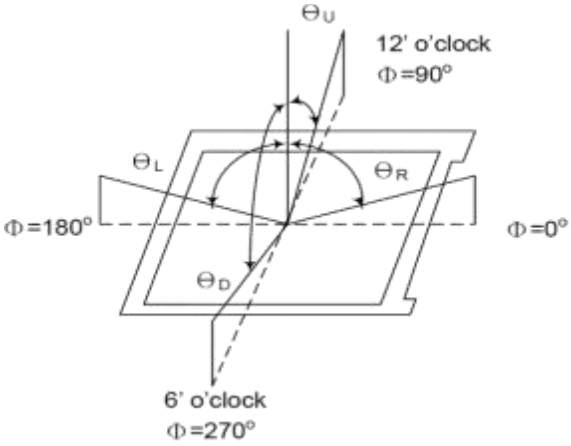

Note4: Color Shift JNCD

- For JNCD measure:
- Fix on the white pattern,
- On the condition θ=0 F=0°,we can get the color coordinate (u1', v1') and on θ F=45°we can get another color coordinate (u2', v2')
- Delta = Square Root((u2'-u1')^2 + (v2'-v1')^2)
- JNCD stands for "Just Noticeable Color Difference"
- For the (u', v') color space JNCD=0.0040.
- 4 JNCD means Delta u'v'<0.016

Note5: Cross-talk

22% black window ， 128 gray background. Pattern Left/Right 9mm shift

$$Crosstalk(V) = \max\left(\left|\frac{L_{V1}-L_{V2}}{L_{V2}}\right|\times 100, \left|\frac{L_{V3}-L_{V4}}{L_{V4}}\right|\times 100\right)$$

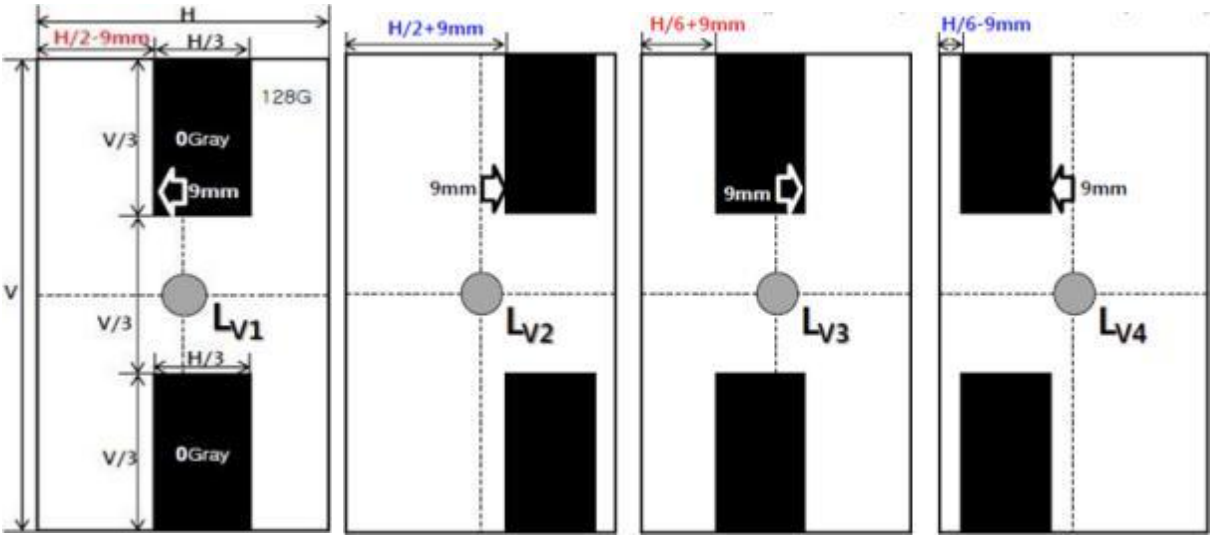

$$Crosstalk(H) = \max\left(\left|\frac{L_{H1}-L_{H2}}{L_{H2}}\right|\times 100, \left|\frac{L_{H3}-L_{H4}}{L_{H4}}\right|\times 100\right)$$

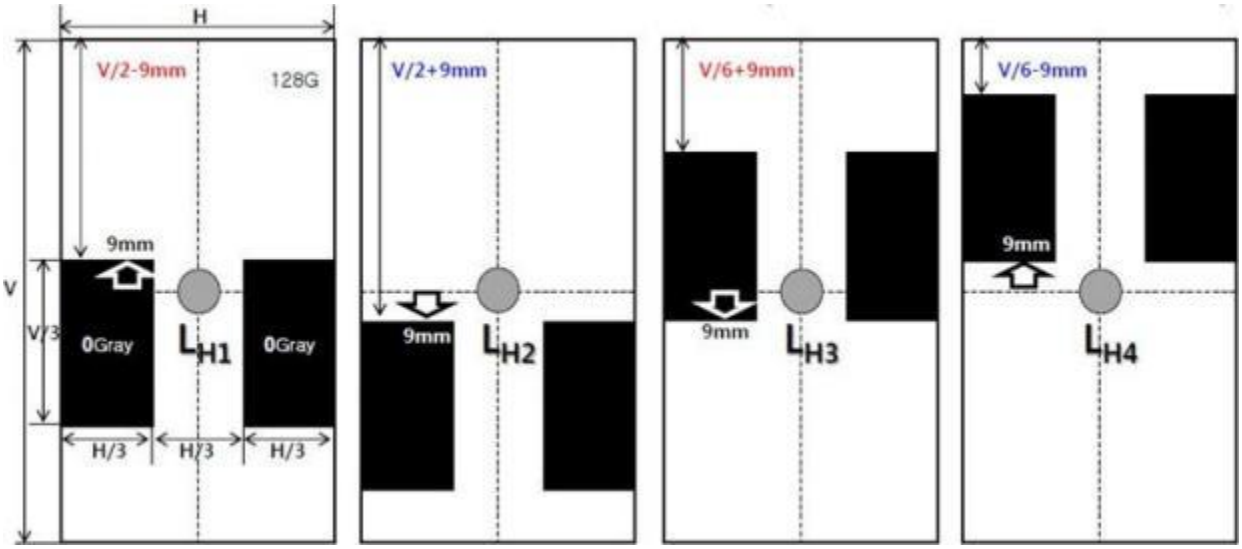

Note6: Response Time

Response time=Pixel turn on and turn off time (White<=>Black).

It is measuring transition timefrom 10%to 90%of luminance.

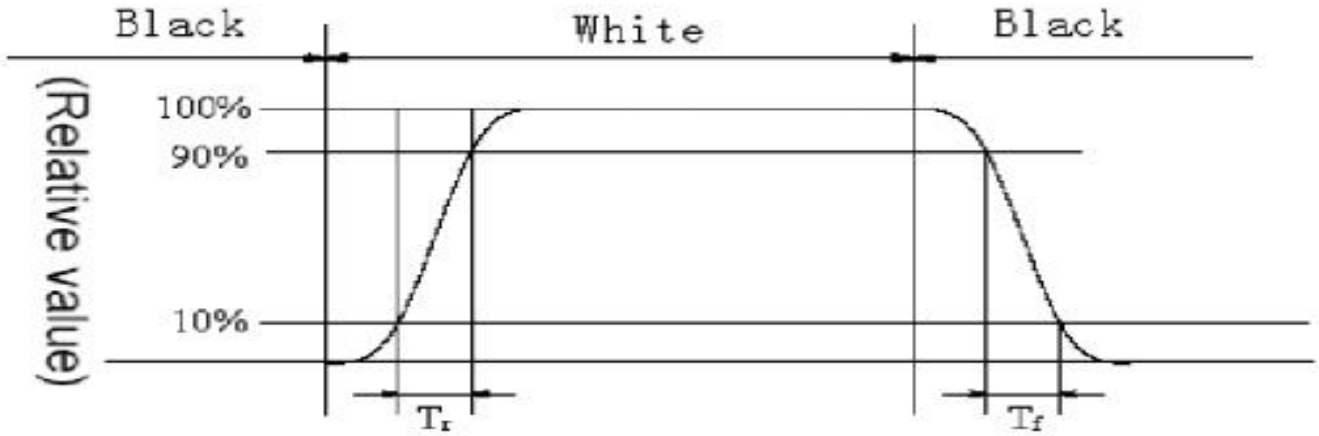

Note 7: Flicker

Suggested Instruments: Konica Minolta CA-310 or Klein Instruments K-8

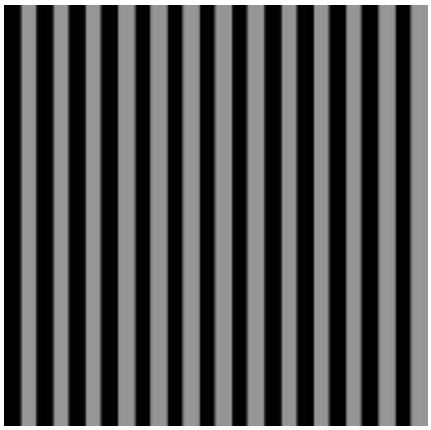

Odd row : **L0** Black
Even row : **L186** gray level

Flicker Test Pattern

The flicker level is defined by Fast Fourier Transformation (FTT) as follows:

$$Flicker = 20\log_{10}\left(2\frac{f_{FFTC}(n)}{f_{FFTC}(0)}\right) + FS(Hz) \quad \text{(dB)}$$

Where

fFFTC (n) is the n-th FFT coefficient.

fFFTC (0) is the 0-th FFT coefficient which is DC component.

FS(Hz) is the flicker sensitivity as a function of frequency.

The peak flicker level shall be reported based on the calculation using above formula in which FS(Hz) is determined by the flicker weighing factor shown below.

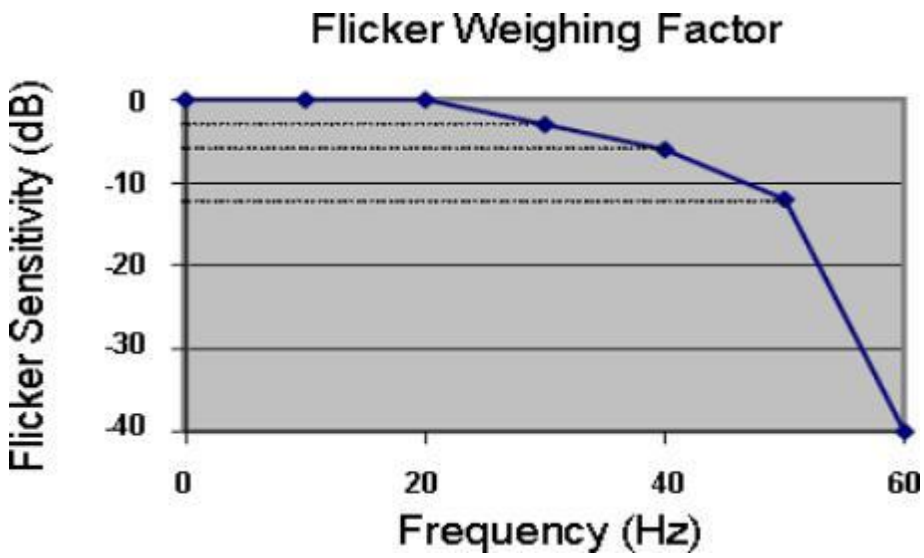

Note8: Image Retention

Using chessboard pattern (8 * 8) light on 1hr,and switch to 127 gray. The Image retention should not be seen after 3 mins.

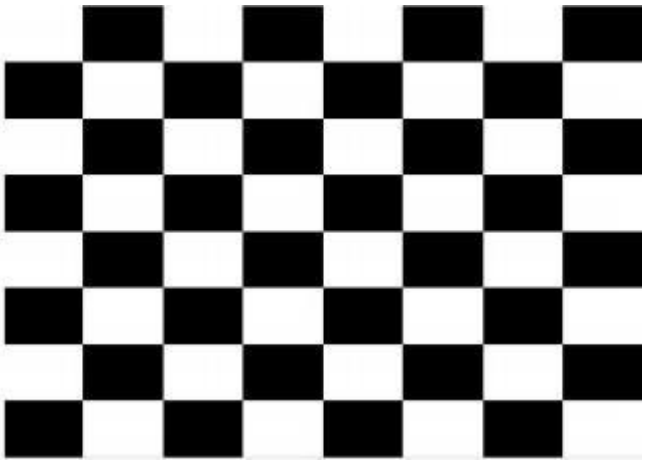

Note9: Image Sticking

Using chessboard pattern (8 * 8) light on 3 hrs, and switch to 127 gray.

The Image Sticking should not be seen after 60 min with ND02 filter (image sticking disappear after stewing).

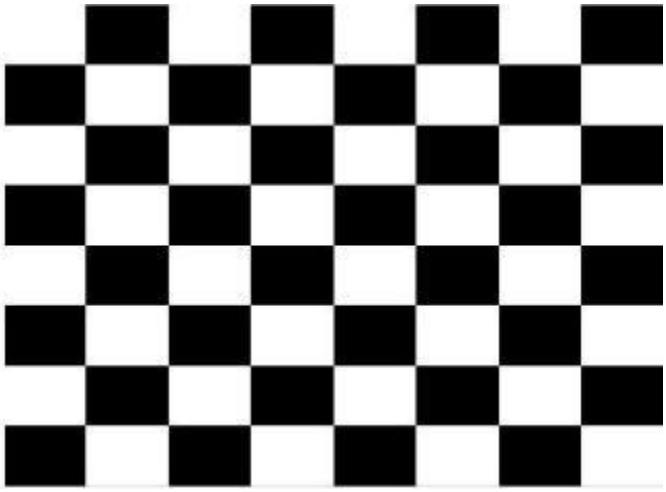

Note10: Color Uniformity

Total 9 measure points should set as shown in the following figures. The CIE 1967 Standards shall be used.The color difference is calculated by using following formula: Max (△u'v') (the max △u'v' value between two random point of 9 point)

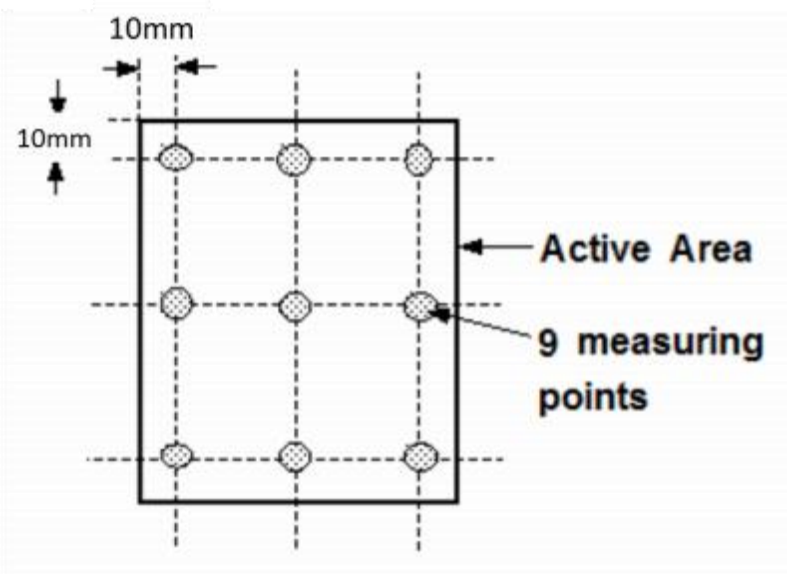

6. Electrical Characteristics

6.1 Absolute Maximum Rating

Characteristics	Symbol	Min.	Max.	Unit	Note
Power Supply Voltage	DC_IN	-0.5	16	V	Note1
Operating temperature	T_{OP}	-20	+70	℃	
Storage temperature	T_{ST}	-30	+80	℃	

NOTE1: If the absolute maximum rating of even is one of the above parameters is exceeded even momentarily, the quality of the product may be degraded. Absolute maximum ratings, therefore, specify the values exceeding which the product may be physically damaged. Be sure to use the product within the range of the absolute maximum ratings.

6.2 DC Electrical Characteristics

Characteristics	Symbol	Min.	Typ.	Max.	Unit	Note
Power Supply Voltage	DC_IN	9	12	16	V	
Normal mode Current consumption	I_{DC_IN}	--	60	--	mA	DC_IN=12V

7. AMOLED Module Out-Going Quality Level

7.1 VISUAL & FUNCTION INSPECTION STANDARD

7.1.1 Inspection conditions

Inspection performed under the following conditions is recommended.

Temperature : 25±5℃

Humidity : 65%±10%RH

Viewing Angle : Normal viewing Angle.

Illumination: Single fluorescent lamp (300 to 700Lux)

Viewing distance:30-50cm

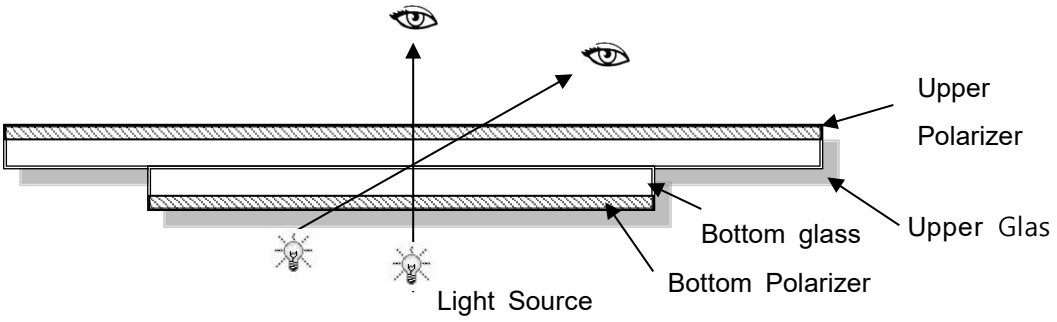

7.1.2 Definition

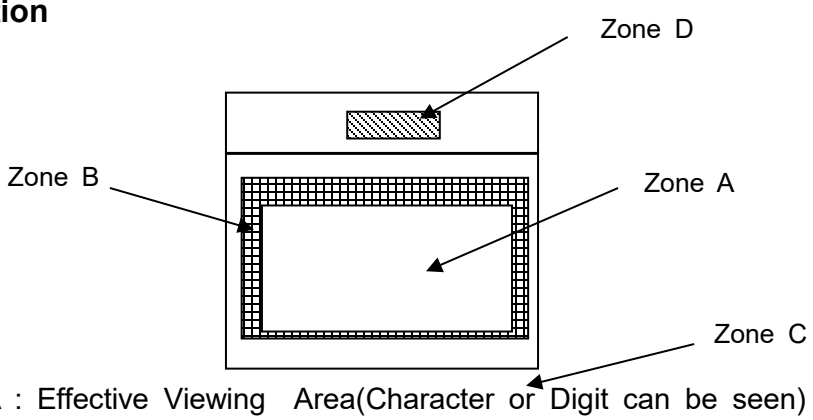

Zone A : Effective Viewing Area(Character or Digit can be seen)

Zone B : Viewing Area except Zone A

Zone C : Outside (Zone A+Zone B) which can not be seen after assembly by customer .)

Zone D : IC Bonding Area

Note:

As a general rule ,visual defects in Zone C can be ignored when it doesn't effect product function or ap pearance after assembly by customer

7.1.3 Sampling Plan

According to GB/T 2828-2003 ; , normal inspection, Class Ⅱ

AQL:

Major defect	Minor defect
0.65	1.5

No	Items to be inspected	Criteria	Classification of defects
1	Functional defects	1) No display, Open or miss line 2) Display abnormally, Short 3) Backlight no lighting, abnormal lighting. etc	Major
2	Missing	Missing components and etc	
3	Outline dimension	Overall outline dimension beyond the drawing is not allowed,deformation and etc	
4	Color tone	Color unevenness, refer to limited sample	Minor
5	Spot/Line defect	Light dot,Dim spot,(Note1) Polarizer Air Bubble, Polarizer accidented spot and etc	
6	Soldering appearance	Good soldering , Peeling off is not allowed and etc	
7	AMOLED/Polarizer	Black/White spot/line, scratch, crack, etc.	

Note1: a) Light dot：Dots appear bright and unchanged in size in which AMOLED panel is displaying under black pattern.

b) Dim dot: Dots appear dark and unchanged in size in which AMOLED panel is displaying under pure red, green, blue picture.

7.1.4 Criteria (Visual)

<table>
<tr><th>Number</th><th>Items</th><th>Criteria(mm)</th></tr>
<tr><td rowspan="3">1.0 AMOLED Crack/Broken
NOTE:
X: Length
Y: Width
Z: Height
L: Length of ITO,
T: Height of AMOELD</td><td>(1) The edge of AMOLED broken</td><td> 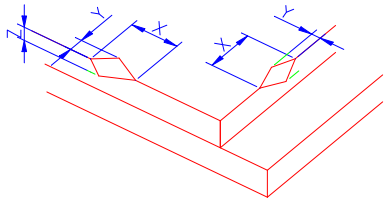

<table>
<tr><th>X</th><th>Y</th><th>Z</th></tr>
<tr><td>≤3.0mm</td><td><Inner border line of the seal</td><td>≤T</td></tr>
</table></td></tr>
<tr><td>(2)AMOLED corner broken</td><td> 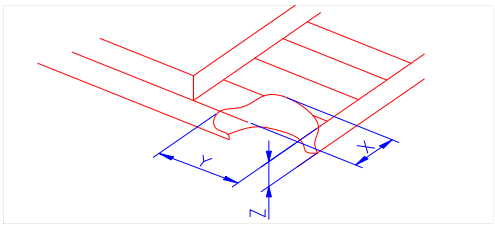

<table>
<tr><th>X</th><th>Y</th><th>Z</th></tr>
<tr><td>≤3.0mm</td><td>≤L</td><td>≤T</td></tr>
</table></td></tr>
<tr><td>(3) AMOLED crack</td><td> 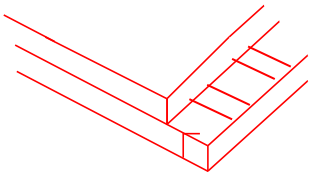

Crack
Not allowed</td></tr>
</table>

2.0

Spot defect

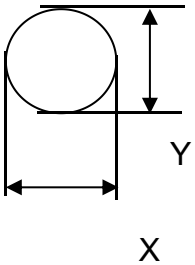

Φ=(X+Y)/2

① light dot (black/white spot , pinhole, stain，etc.)

Zone / Size (mm)	Acceptable Qty		
	A	B	C
Φ≤0.10	Ignore	Ignore	
0.10<Φ≤0.25	4(distance≧10mm)		
0.25<Φ≤0.35	3		
Φ>0.4	0		

② Dim spot (light leakage、dent、dark spot，etc)

Zone / Size (mm)	Acceptable Qty		
	A	B	C
Φ≤0.1	Ignore	Ignore	
0.10<Φ≤0.25	4(distance≧10mm)		
0.25<Φ≤0.35	3		
Φ>0.4	0		

③ Polarizer accidented spot

Zone / Size (mm)	Acceptable Qty		
	A	B	C
Φ≤0.2	Ignore		Ignore
0.3<Φ≤0.5	3(distance≧10mm)		
Φ>0.5	1		

④Polarizer Bubble

Zone / Size (mm)	Acceptable Qty		
	A	B	C
Φ≤0.1	Ignore		Ignore
0.10<Φ≤0.25	2(distance≧10mm)		
0.25<Φ≤0.35	1		
Φ>0.4	0		

3.0	AMOLED Pixel defe ct	Pixel bad points

Item	Zone A	Acceptable Qt
Bright dot	Random	N≤2
	2 dots adjacent	N≤0
	3 dots adjacent	N≤0
Dark dot	Random	N≤3
	2 dots adjacent	N≤0
	3 dots adjacent	N≤0
Distance	1. Minimum Distance Between Bright dots. 2. Minimum Distance Between dark dots 3. Minimum Distance Between dark and bright dot.	5mm
Total bright and dark dot		N≤4

Note:

A) Bright dot：Dots appear bright and unchanged in size in which AMOLED panel is displaying under black pattern.

B) Dark dot: Dots appear dark and unchanged in size in which AMOLED panel is displaying under pure red, green, blue picture.

C) 2 dot adjacent = 1 pair = 2 dots

Picture:

2 dot adjacent

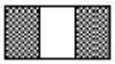

2 dot adjacent

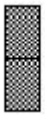

2 dot adjacent (vertical)

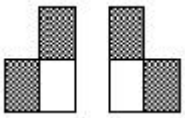

2 dot adjacent (slant)

<table>
<tr><td>4.0</td><td>Line defect (AMOLED /Polarizer backlight black/white line, scratch, stain)
 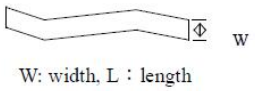

N：Count</td><td>
<table>
<tr><td rowspan="2">Width(mm)</td><td rowspan="2">Length(mm)</td><td colspan="3">Acceptable Qty</td></tr>
<tr><td>A</td><td>B</td><td>C</td></tr>
<tr><td>Φ≤0.05</td><td>Ignore</td><td colspan="2">Ignore</td><td rowspan="3">Ignore</td></tr>
<tr><td>0.05<W≤0.06</td><td>L≤5.0</td><td colspan="2">N≤3</td></tr>
<tr><td>0.07<W≤0.08</td><td>L≤4.0</td><td colspan="2">N≤2</td></tr>
<tr><td>W>0.08</td><td colspan="4">Define as spot defect</td></tr>
</table>
</td></tr>
<tr><td>5.0</td><td>Electronic Components SMT.</td><td>Not allow missing parts，solderless connection，cold solder joint，mismatch，The positive and negative polarity opposite</td></tr>
<tr><td>6.0</td><td>Display color& Brightness.</td><td>1. Color：Measuring the color coordinates, The measurement standard according to the datasheet or samples.
2. Brightness：Measuring the brightness of White screen, The measurement standard according to the datasheet or Samples.</td></tr>
</table>

Criteria (functional items)

Number	Items	Criteria (mm)
1	No display	Not allowed
2	Missing segment	Not allowed
3	Short	Not allowed
4	Backlight no lighting	Not allowed

8. Reliability Test Result

Item	Condition	Inspection after test
High Temperature Operating	70℃,96HR	Inspection after 2~4hours storage at room temperature, the sample shall be free from defects: 1.Air bubble in the AMOLED; 2.Non-display; 3.Missing segments/line; 4.Glass crack; 5.Current IDD is twice higher than initial value.
Low Temperature Operating	-20℃, 96HR	
High Temperature Storage	80℃, 96HR	
Low Temperature Storage	-30℃, 96HR	
High Temperature & High Humidity Operating	+60℃, 90% RH ,96 hours.	
Thermal Shock (Non-operation)	-10℃,30 min ↔ 60℃,30 min, Change time:5min 20CYC.	
ESD test	C=150pF, R=330,5points/panel Air:±8KV, 5times; Contact:±4KV, 5 times; (Environment: 15℃~35℃, 30%~60%).	
Vibration (Non-operation)	Frequency range:10~55Hz, Stroke:1.5mm Sweep:10Hz~55Hz~10Hz 2 hours for each direction of X.Y.Z. (6 hours for total) (Package condition).	
Box Drop Test	1 Corner 3 Edges 6 faces,80㎝(MEDIUM BOX)	

Remark:

1.The test samples should be applied to only one test item.

2.Sample size for each test item is 3~10pcs.

3.For Damp Proof Test, Pure water(Resistance > 10MΩ) should be used.

4.In case of malfunction defect caused by ESD damage, if it would be recovered to normal state after resetting, it would be judged as a good part.

5.Failure Judgment Criterion: Basic Specification, Electrical Characteristic, Mechanical Characteristic, Optical Characteristic.

6. The color fading mura of polarizing filter should not care.

9. Cautions and Handling Precautions

9.1 Handling and Operating the Module

(1) When the module is assembled, it should be attached to the system firmly.
Do not warp or twist the module during assembly work.
(2) Protect the module from physical shock or any force. In addition to damage, this may cause improper operation or damage to the module and back-light unit.
(3) Note that polarizer is very fragile and could be easily damaged. Do not press or scratch the surface.
(4) Do not allow drops of water or chemicals to remain on the display surface.
If you have the droplets for a long time, staining and discoloration may occur.
(5) If the surface of the polarizer is dirty, clean it using some absorbent cotton or soft cloth.
(6) The desirable cleaners are water, IPA (Isopropyl Alcohol) or Hexane.
Do not use ketene type materials (ex. Acetone), Ethyl alcohol, Toluene, Ethyl acid or Methyl chloride. It might permanent damage to the polarizer due to chemical reaction.
(7) If the liquid crystal material leaks from the panel, it should be kept away from the eyes or mouth. In case of contact with hands, legs, or clothes, it must be washed away thoroughly with soap.
(8) Protect the module from static; it may cause damage to the CMOS ICs.
(9) Use finger-stalls with soft gloves in order to keep display clean during the incoming inspection and assembly process.
(10) Do not disassemble the module.
(11) Protection film for polarizer on the module shall be slowly peeled off just before use so that the electrostatic charge can be minimized.
(12) Pins of I/F connector shall not be touched directly with bare hands.
(13) Do not connect, disconnect the module in the “Power ON” condition.

9.2 Storage and Transportation.

(1) Do not leave the panel in high temperature, and high humidity for a long time.
It is highly recommended to store the module with temperature from 0 to 35 ℃ and relative humidity of less than 70%
(2) Do not store the AMOLED module in direct sunlight.
(3) The module shall be stored in a dark place. When storing the modules for a long time, be sure to adopt effective measures for protecting the modules from strong ultraviolet radiation, sunlight, or fluorescent light.
(4) It is recommended that the modules should be stored under a condition where no condensation is allowed. Formation of dewdrops may cause an abnormal operation or a failure of the module.
In particular, the greatest possible care should be taken to prevent any module from being operated where condensation has occurred inside.

(5) This panel has its circuitry FPC on the bottom side and should be handled carefully in order not to be stressed.

10. Packing

----TBD----